Finite State Machines

- Sequential circuits
  - primitive sequential elements
  - combinational logic
- Models for representing sequential circuits
  - finite-state machines (Moore and Mealy)
- Basic sequential circuits revisited
  - shift registers
  - counters
- Design procedure
  - state diagrams
  - state transition table
  - next state functions
- Hardware description languages

 © Copyright 2004, Gaetano Borriello and Randy

Abstraction of state elements

- Divide circuit into combinational logic and state
- Localize the feedback loops and make it easy to break cycles
- Implementation of storage elements leads to various forms of sequential logic

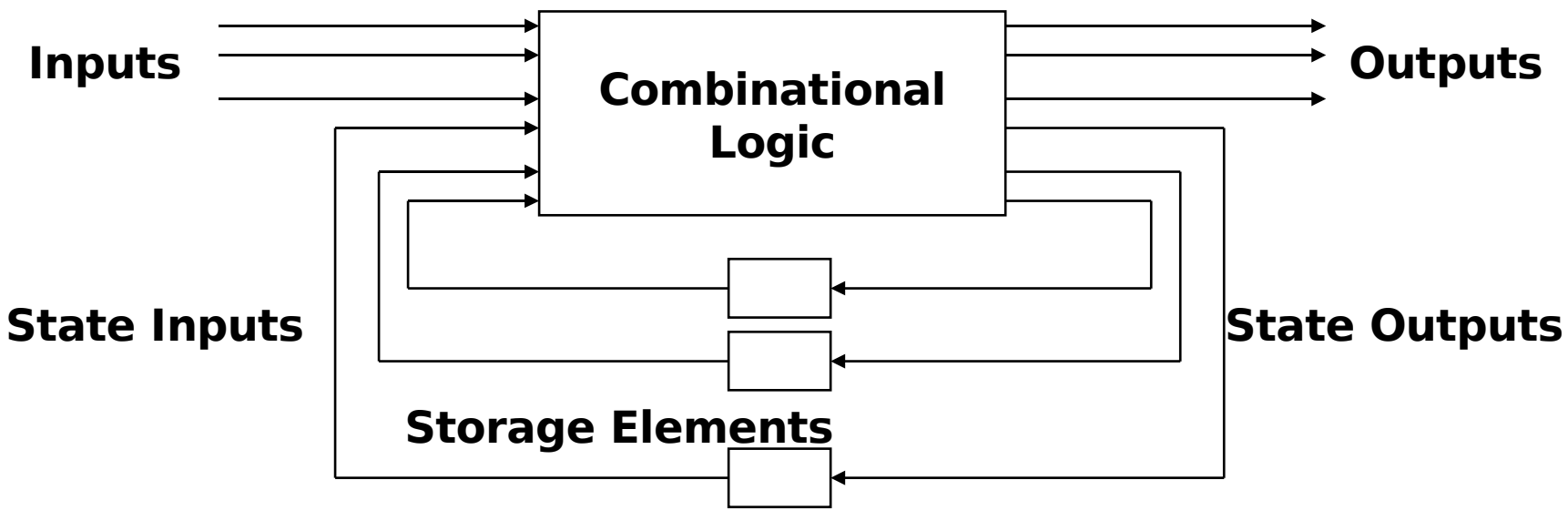

 © Copyright 2004, Gaetano Borriello and Randy

Forms of sequential logic

- Asynchronous sequential logic – state changes occur whenever state inputs change (elements may be simple wires or delay elements)
- Synchronous sequential logic – state changes occur in lock step across all storage elements (using a periodic waveform - the clock)

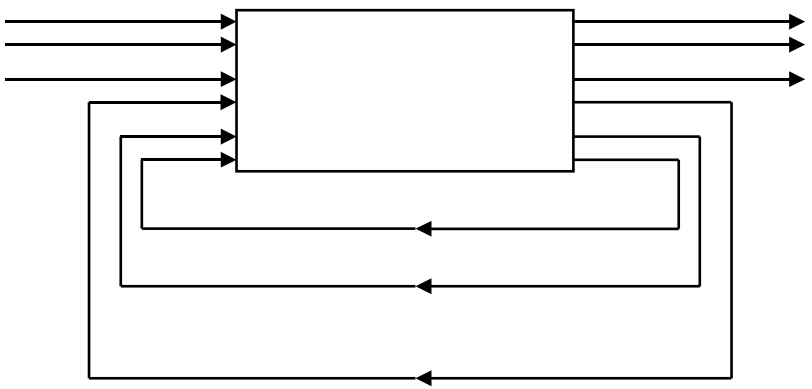

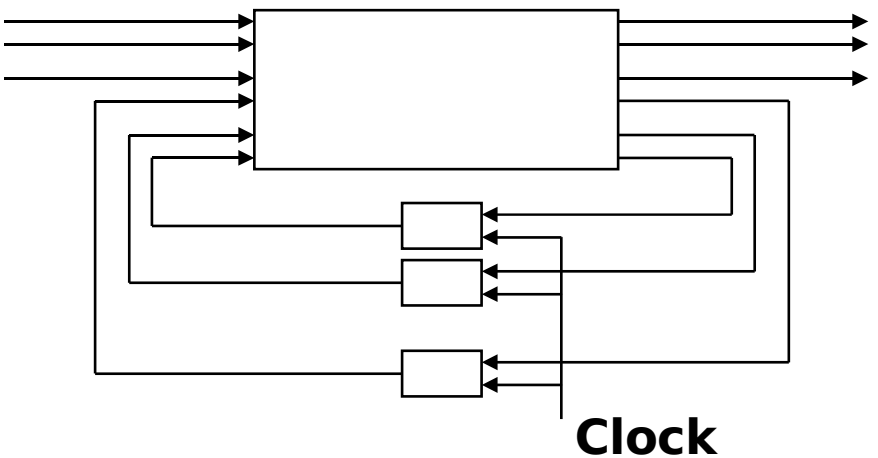

 © Copyright 2004, Gaetano Borriello and Randy

Finite state machine representations

- States: determined by possible values in sequential storage elements
- Transitions: change of state
- Clock: controls when state can change by controlling storage elements

- Sequential logic
  - sequences through a series of states
  - based on sequence of values on input signals
  - clock period defines elements of sequence

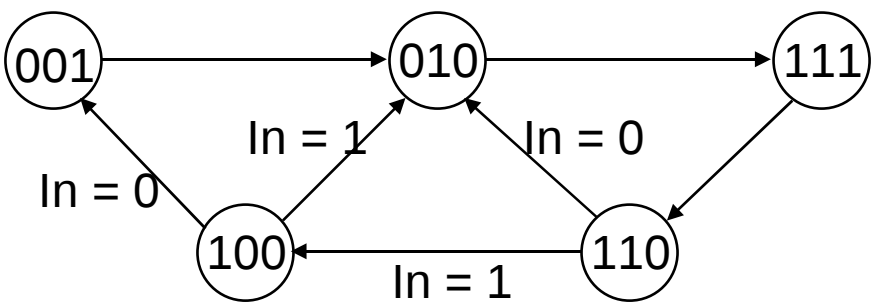

 © Copyright 2004, Gaetano Borriello and Randy

Example finite state machine diagram

- Combination lock from introduction to course
  - 5 states
  - 5 self-transitions
  - 6 other transitions between states
  - 1 reset transition (from all states) to state S1

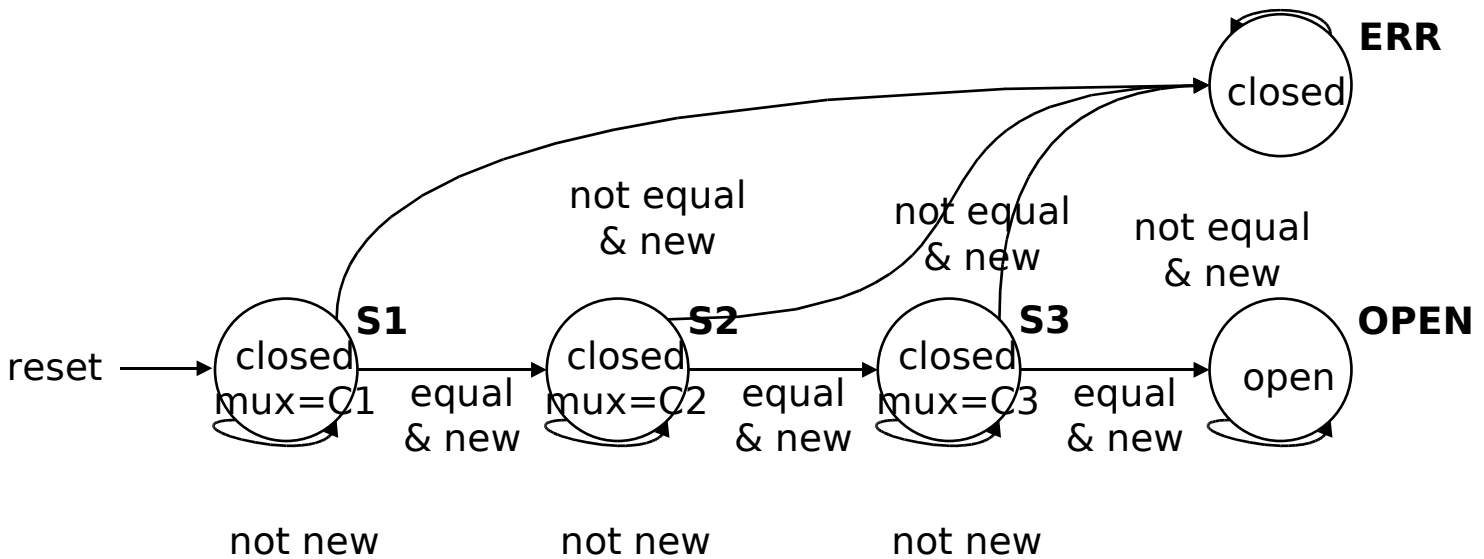

Can any sequential system be represented with a state diagram?

- Shift register
  - input value shown on transition arcs
  - output values shown within state node

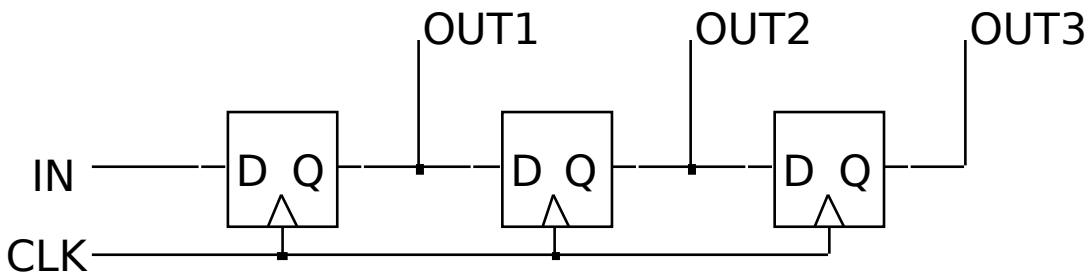

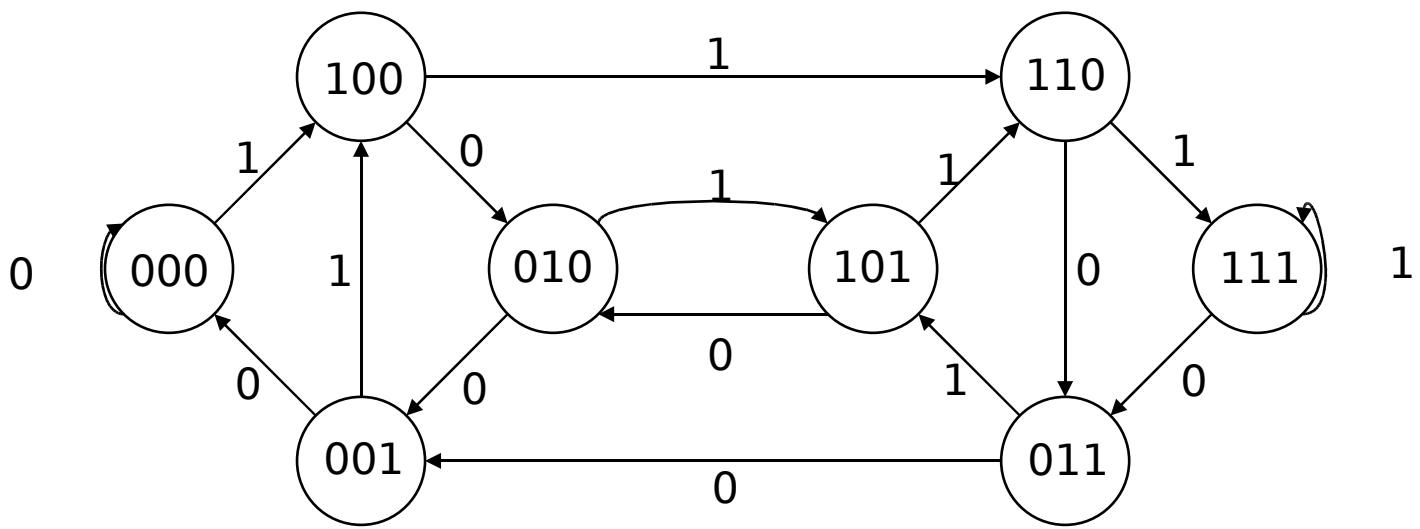

Counters are simple finite state machines

- Counters
  - proceed through well-defined sequence of states in response to enable
- Many types of counters: binary, BCD, Gray-code
  - 3-bit up-counter: 000, 001, 010, 011, 100, 101, 110, 111, 000, ...
  - 3-bit down-counter: 111, 110, 101, 100, 011, 010, 001, 000, 111, ...

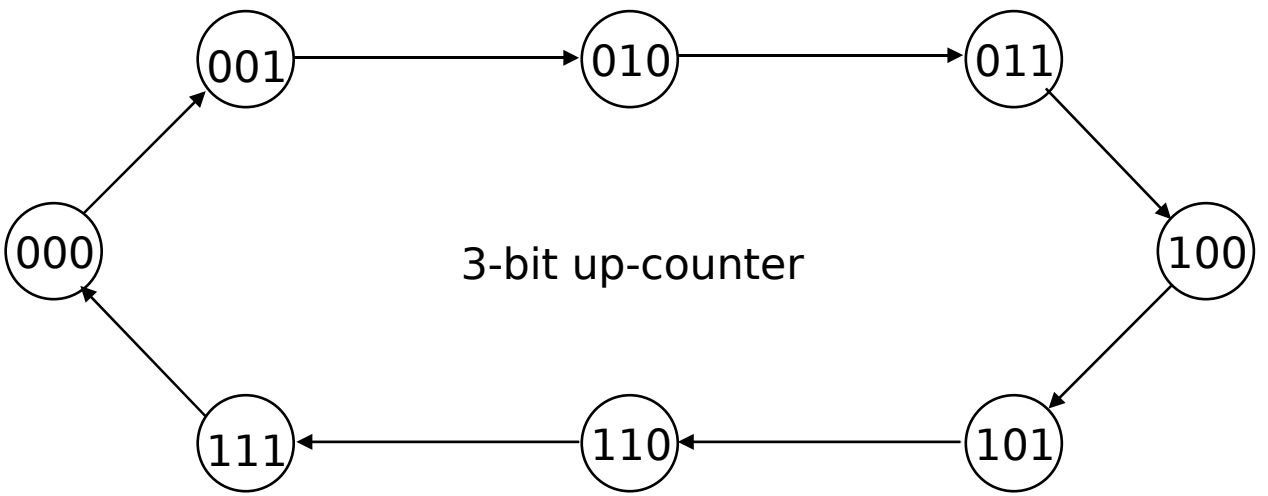

 © Copyright 2004, Gaetano Borriello and Randy

How do we turn a state diagram into logic?

- Counter
  - 3 flip-flops to hold state
  - logic to compute next state
  - clock signal controls when flip-flop memory can change
    - wait long enough for combinational logic to compute new value
    - don't wait too long as that is low performance

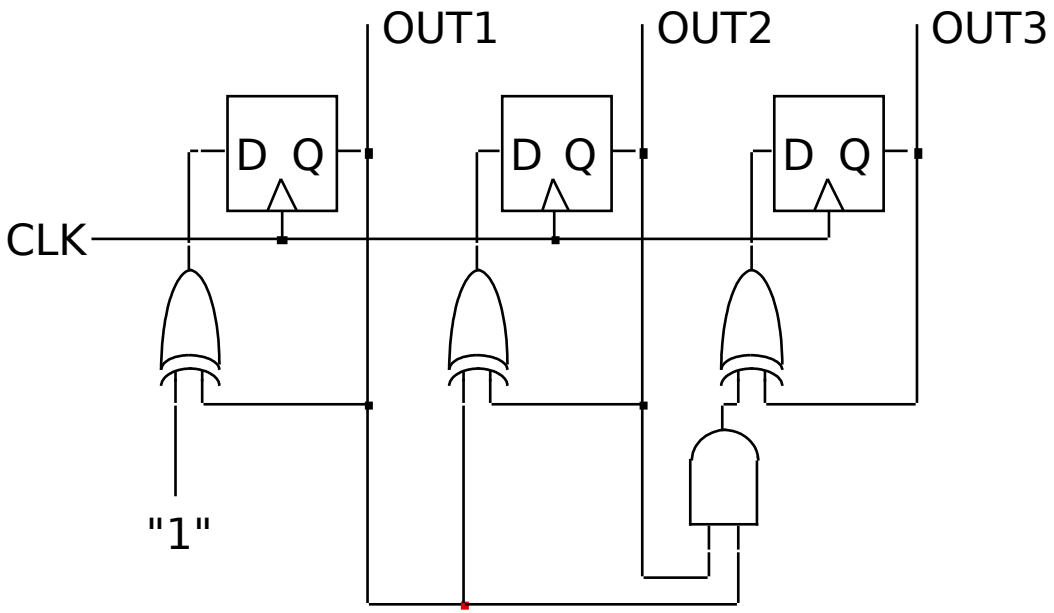

 © Copyright 2004, Gaetano Borriello and Randy

FSM design procedure

- Start with counters
  - simple because output is just state
  - simple because no choice of next state based on input

- State diagram to state transition table
  - tabular form of state diagram
  - like a truth-table
- State encoding
  - decide on representation of states
  - for counters it is simple: just its value
- Implementation
  - flip-flop for each state bit
  - combinational logic based on encoding

 © Copyright 2004, Gaetano Borriello and Randy

FSM design procedure: state diagram to encoded state transition table

- Tabular form of state diagram
- Like a truth-table (specify output for all input combinations)
- Encoding of states: easy for counters – just use value

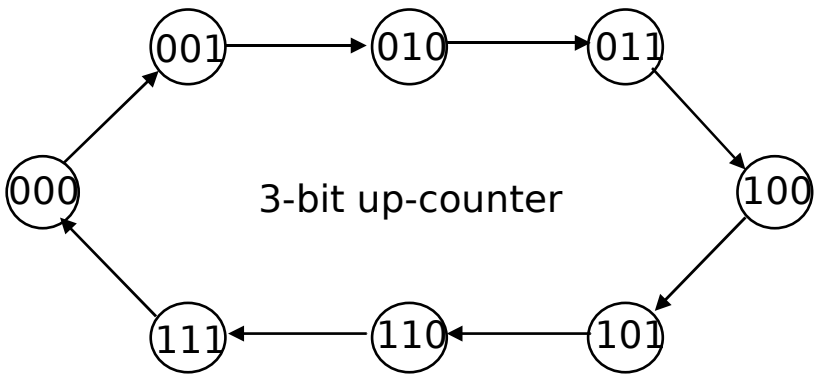

present state		next state	
0	000	001	1
1	001	010	2
2	010	011	3
3	011	100	4
4	100	101	5
5	101	110	6
6	110	111	7
7	111	000	0

 © Copyright 2004, Gaetano Borriello and Randy

Implementation

- D flip-flop for each state bit
- Combinational logic based on encoding

C3	C2	C1	N3	N2	N1
0	0	0	0	0	1
0	0	1	0	1	0
0	1	0	0	1	1
0	1	1	1	0	0
1	0	0	1	0	1
1	0	1	1	1	0
1	1	0	1	1	1
1	1	1	0	0	0

Verilog notation to show function represents an input to D-FF

N1 <= C1’
N2 <= C1C2’ + C1’C2
<= C1 <u>xor</u> C2
N3 <= C1C2C3’ + C1’C3 + C2’C3
<= (C1C2)C3’ + (C1’ + C2’)C3
<= (C1C2)C3’ + (C1C2)’C3
<= (C1C2) <u>xor</u> C3

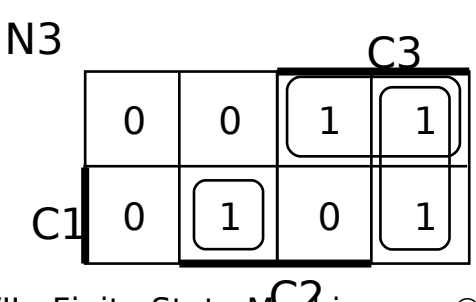

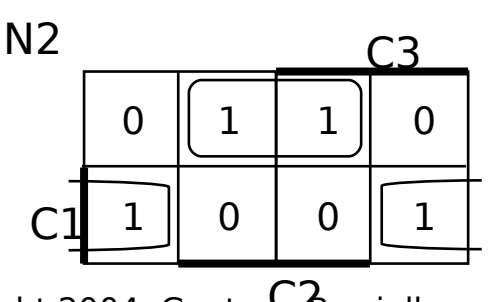

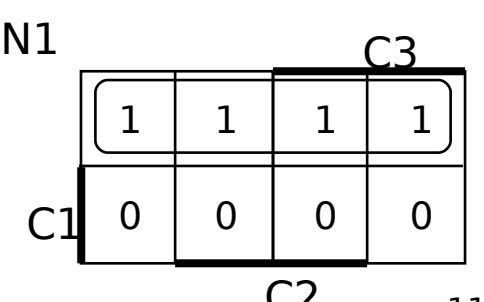

© Copyright 2004, Gaetano Borriello and Randy

Back to the shift register

- Input determines next state

In	C1	C2	C3	N1	N2	N3
0	0	0	0	0	0	0
0	0	0	1	0	0	0
0	0	1	0	0	0	1
0	0	1	1	0	0	1
0	1	0	0	0	1	0
0	1	0	1	0	1	0
0	1	1	0	0	1	1
0	1	1	1	0	1	1
1	0	0	0	1	0	0
1	0	0	1	1	0	0
1	0	1	0	1	0	1
1	0	1	1	1	0	1
1	1	0	0	1	1	0
1	1	0	1	1	1	0
1	1	1	0	1	1	1
1	1	1	1	1	1	1

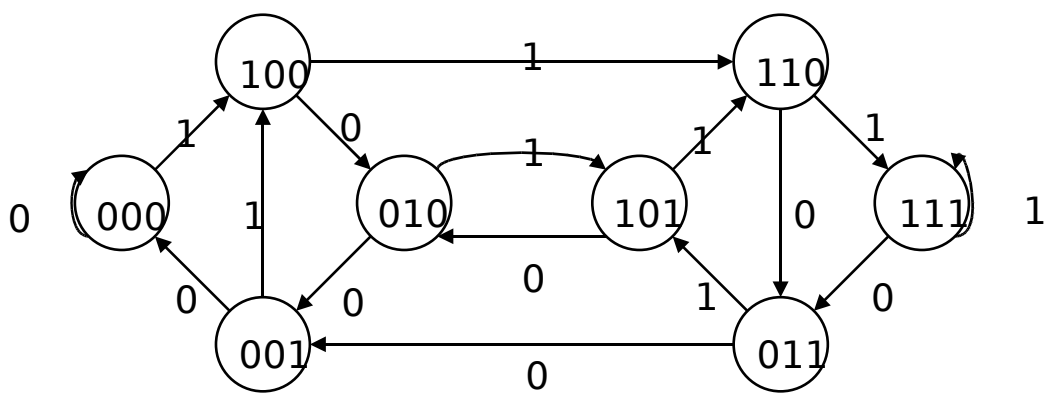

N1 <= In
N2 <= C1
N3 <= C2

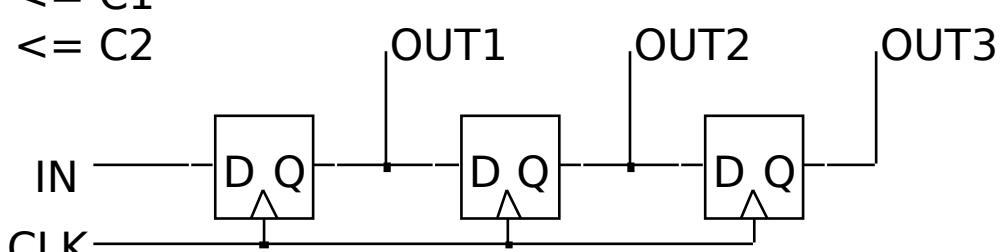

© Copyright 2004, Gaetano Borriello and Randy

More complex counter example

- Complex counter
  - repeats 5 states in sequence
  - not a binary number representation
- Step 1: derive the state transition diagram
  - count sequence: 000, 010, 011, 101, 110
- Step 2: derive the state transition table from the state transition diagram

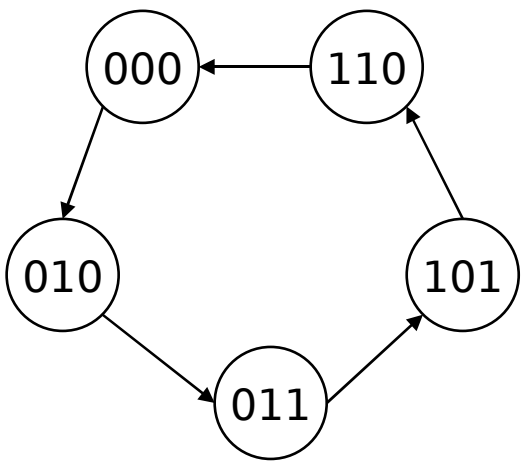

Present State				Next State	
C	B	A	C+	B+	A+
0	0	0	0	1	0
0	0	1	–	–	–
0	1	0	0	1	1
0	1	1	1	0	1
1	0	0	–	–	–
1	0	1	1	1	0
1	1	0	0	0	0
1	1	1	–	–	–

note the don't care conditions that arise from the unused state codes

© Copyright 2004, Gaetano Borriello and Randy

More complex counter example (cont'd)

- Step 3: K-maps for next state functions

C+

A \ B, C	00	01	11	10
0	0	0	0	X
1	X	1	X	1

B+

A \ B, C	00	01	11	10
0	1	1	0	X
1	X	0	X	1

A+

A \ B, C	00	01	11	10
0	0	1	0	X
1	X	1	X	0

C+ <= A

B+ <= B' + A'C'

A+ <= BC'

 © Copyright 2004, Gaetano Borriello and Randy

Self-starting counters (cont'd)

- Re-deriving state transition table from don't care assignment

C+

			C	
	0	0	0	0
A	1	1	1	1
		B		

B+

			C	
	1	1	0	1
A	1	0	0	1
		B		

A+

			C	
	0	1	0	0
A	0	1	0	0
		B		

Present State				Next State	
C	B	A	C+	B+	A+
0	0	0	0	1	0
0	0	1	1	1	0
0	1	0	0	1	1
0	1	1	1	0	1
1	0	0	0	1	0
1	0	1	1	1	0
1	1	0	0	0	0
1	1	1	1	0	0

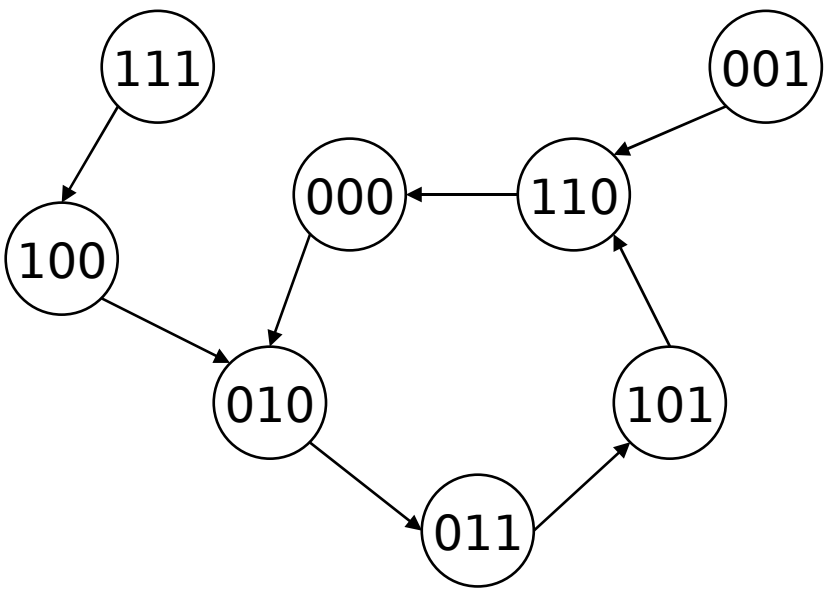

 © Copyright 2004, Gaetano Borriello and Randy

Self-starting counters

- Start-up states
  - at power-up, counter may be in an unused or invalid state
  - designer must guarantee that it (eventually) enters a valid state
- Self-starting solution
  - design counter so that invalid states eventually transition to a valid state
  - may limit exploitation of don't cares

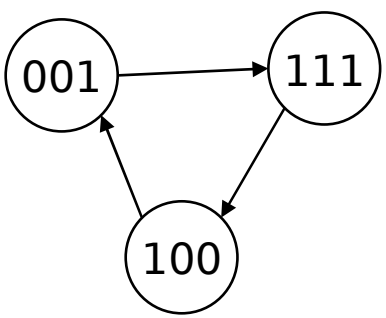

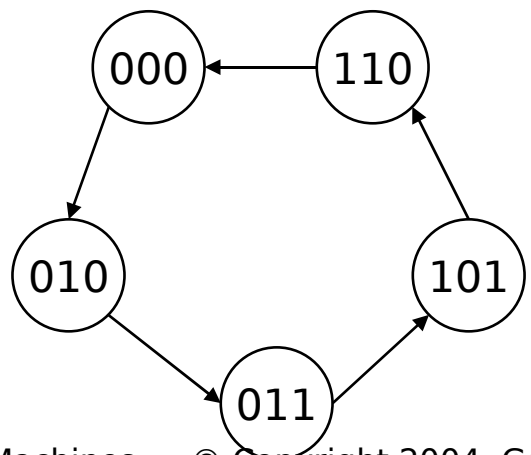

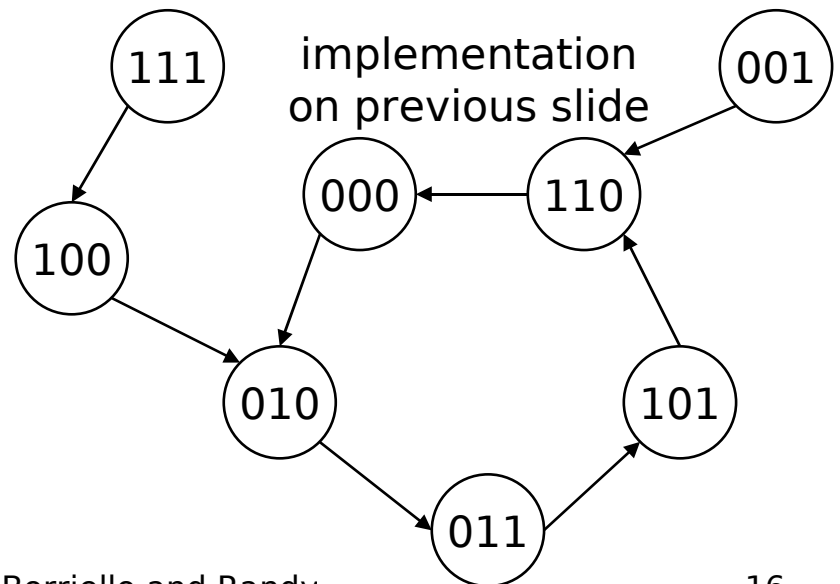

© Copyright 2004, Gaetano Borriello and Randy

Activity

- 2-bit up-down counter (2 inputs)
  - direction: D = 0 for up, D = 1 for down
  - count: C = 0 for hold, C = 1 for count

© Copyright 2004, Gaetano Borriello and Randy

Activity (cont'd)

Counter/shift-register model

- Values stored in registers represent the state of the circuit
- Combinational logic computes:
  - next state
    - function of current state and inputs
  - outputs
    - values of flip-flops

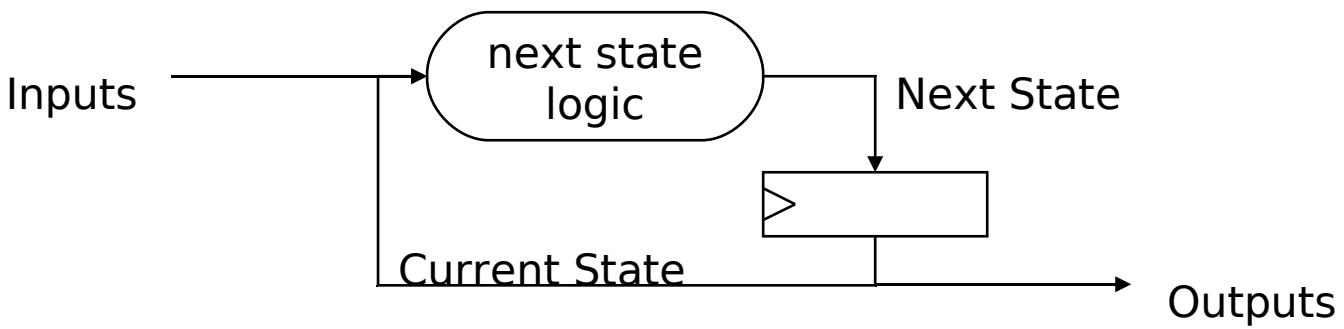

 © Copyright 2004, Gaetano Borriello and Randy

General state machine model

- Values stored in registers represent the state of the circuit
- Combinational logic computes:
  - next state
    - function of current state and inputs
  - outputs
    - function of current state and inputs (Mealy machine)
    - function of current state only (Moore machine)

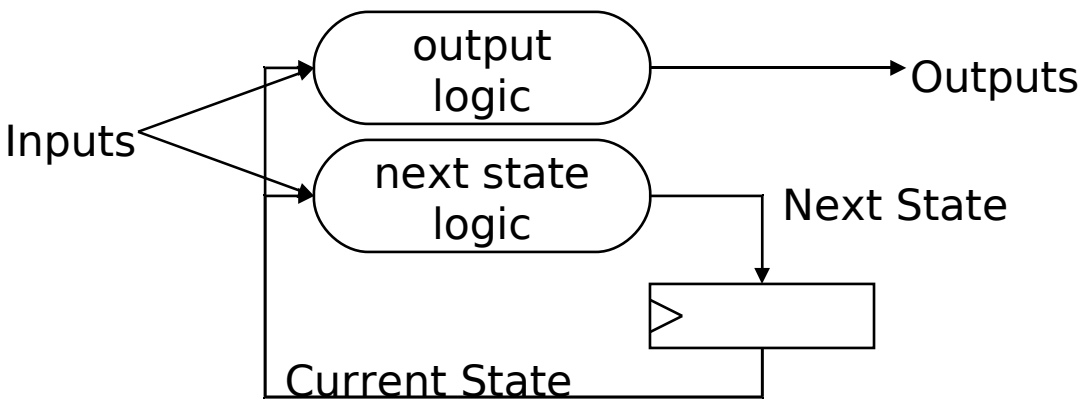

 © Copyright 2004, Gaetano Borriello and Randy

State machine model (cont'd)

- States: $S_1, S_2, ..., S_k$
- Inputs: $I_1, I_2, ..., I_m$
- Outputs: $O_1, O_2, ..., O_n$
- Transition function: $F_s(S_i, I_j)$
- Output function: $F_o(S_i)$ or $F_o(S_i, I_j)$

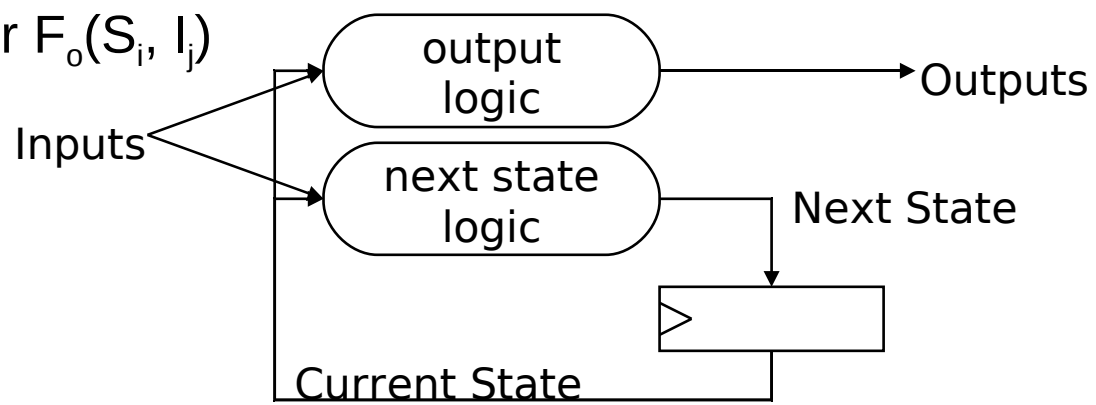

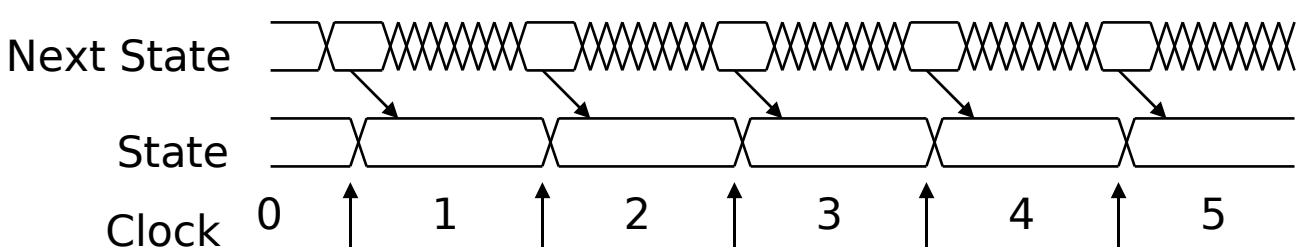

© Copyright 2004, Gaetano Borriello and Randy

Comparison of Mealy and Moore machines

- Mealy machines tend to have less states
  - different outputs on arcs (n^2) rather than states (n)
- Moore machines are safer to use
  - outputs change at clock edge (always one cycle later)
  - in Mealy machines, input change can cause output change as soon as logic is done – a big problem when two machines are interconnected – asynchronous feedback may occur if one isn't careful
- Mealy machines react faster to inputs
  - react in same cycle – don't need to wait for clock
  - in Moore machines, more logic may be necessary to decode state into outputs – more gate delays after clock edge

 © Copyright 2004, Gaetano Borriello and Randy

Comparison of Mealy and Moore machines (cont'd)

- Moore

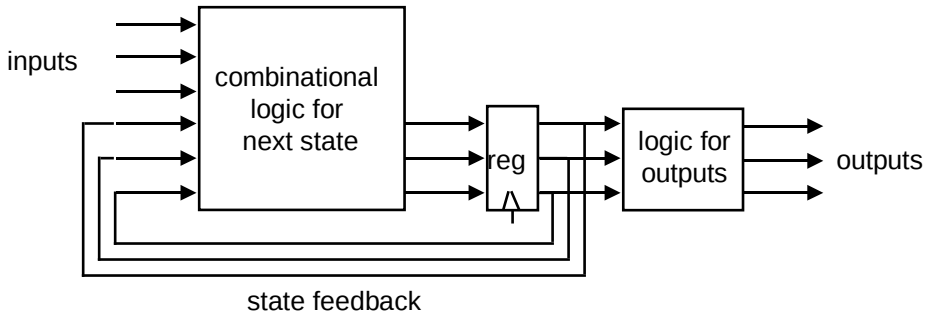

- Mealy

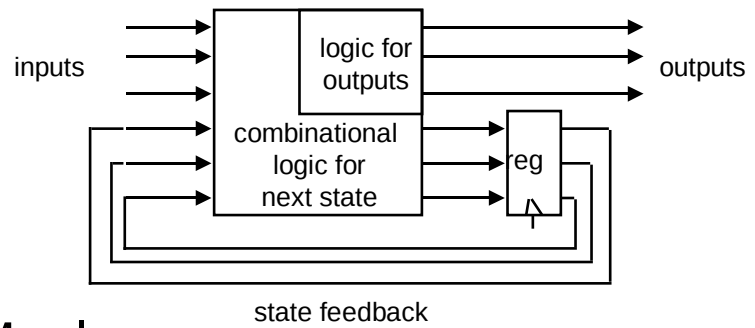

- Synchronous Mealy

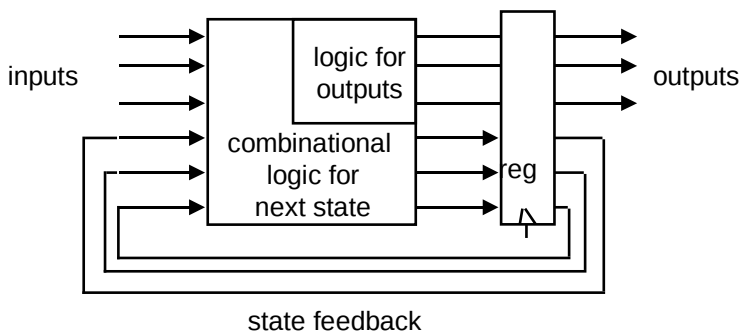

© Copyright 2004, Gaetano Borriello and Randy

Specifying outputs for a Moore machine

- Output is only function of state
  - specify in state bubble in state diagram
  - example: sequence detector for 01 or 10

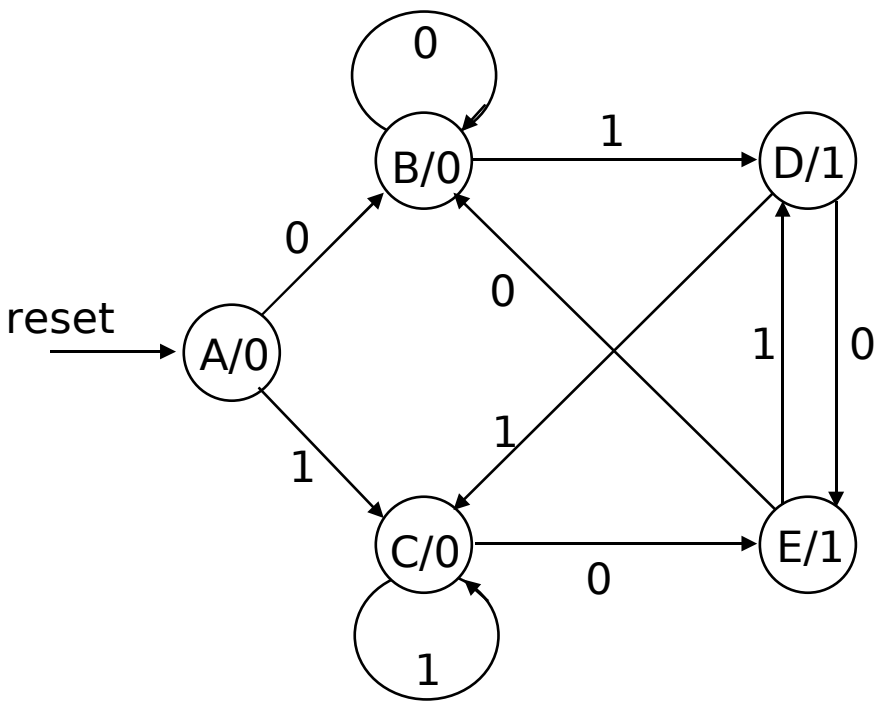

reset	input	current state	next state	output
1	–	–	A	
0	0	A	B	0
0	1	A	C	0
0	0	B	B	0
0	1	B	D	0
0	0	C	E	0
0	1	C	C	0
0	0	D	E	1
0	1	D	C	1
0	0	E	B	1
0	1	E	D	1

 © Copyright 2004, Gaetano Borriello and Randy

Specifying outputs for a Mealy machine

- Output is function of state and inputs
  - specify output on transition arc between states
  - example: sequence detector for 01 or 10

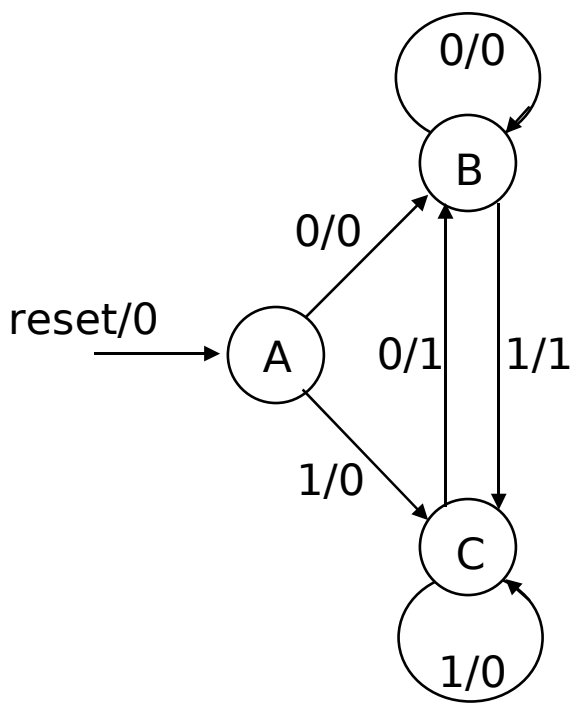

reset	input	current state	next state	output
1	–	–	A	0
0	0	A	B	0
0	1	A	C	0
0	0	B	B	0
0	1	B	C	1
0	0	C	B	1
0	1	C	C	0

 © Copyright 2004, Gaetano Borriello and Randy

Registered Mealy machine (really Moore)

- Synchronous (or registered) Mealy machine
  - registered state AND outputs
  - avoids ‘glitchy’ outputs
  - easy to implement in PLDs
- Moore machine with no output decoding
  - outputs computed on transition to next state rather than after entering
  - view outputs as expanded state vector

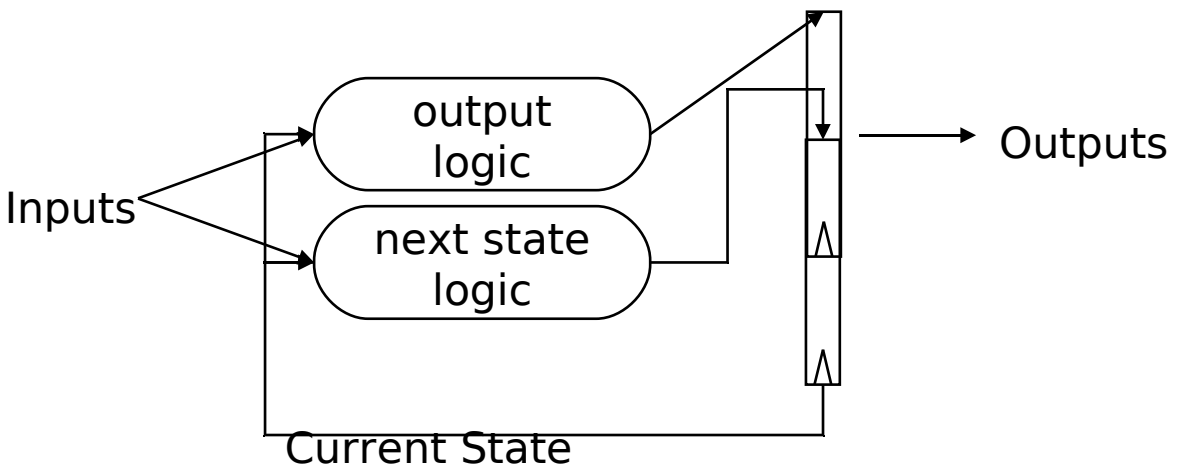

 © Copyright 2004, Gaetano Borriello and Randy

Example: vending machine

- Release item after 15 cents are deposited
- Single coin slot for dimes, nickels
- No change

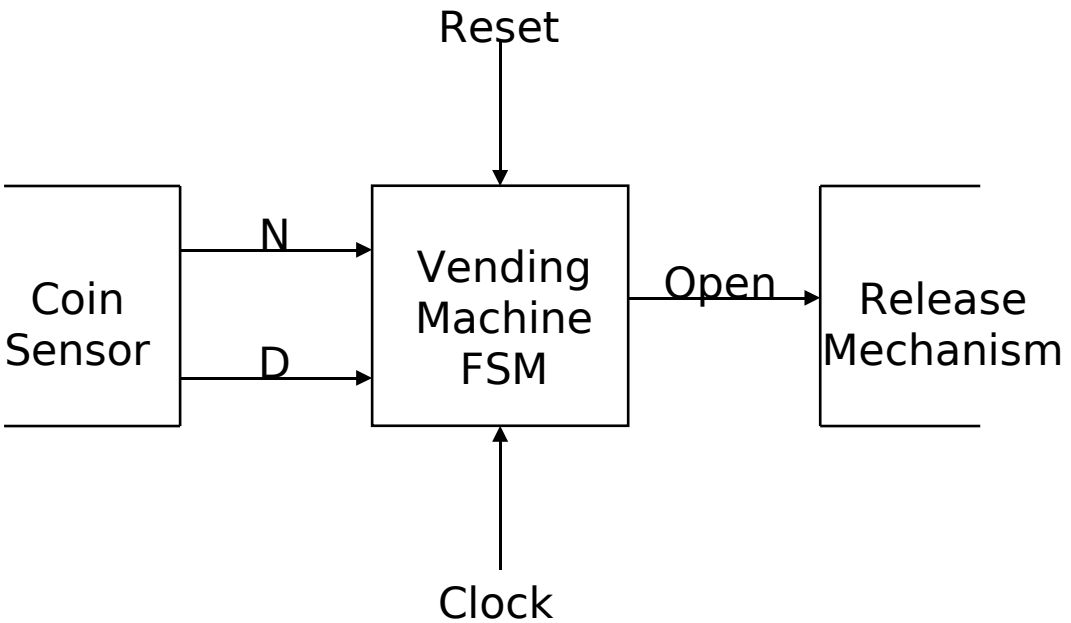

 © Copyright 2004, Gaetano Borriello and Randy

Example: vending machine (cont'd)

- Suitable abstract representation
  - tabulate typical input sequences:
    - 3 nickels
    - nickel, dime
    - dime, nickel
    - two dimes
  - draw state diagram:
    - inputs: N, D, reset
    - output: open chute
  - assumptions:
    - assume N and D asserted for one cycle
    - each state has a self loop for N = D = 0 (no coin)

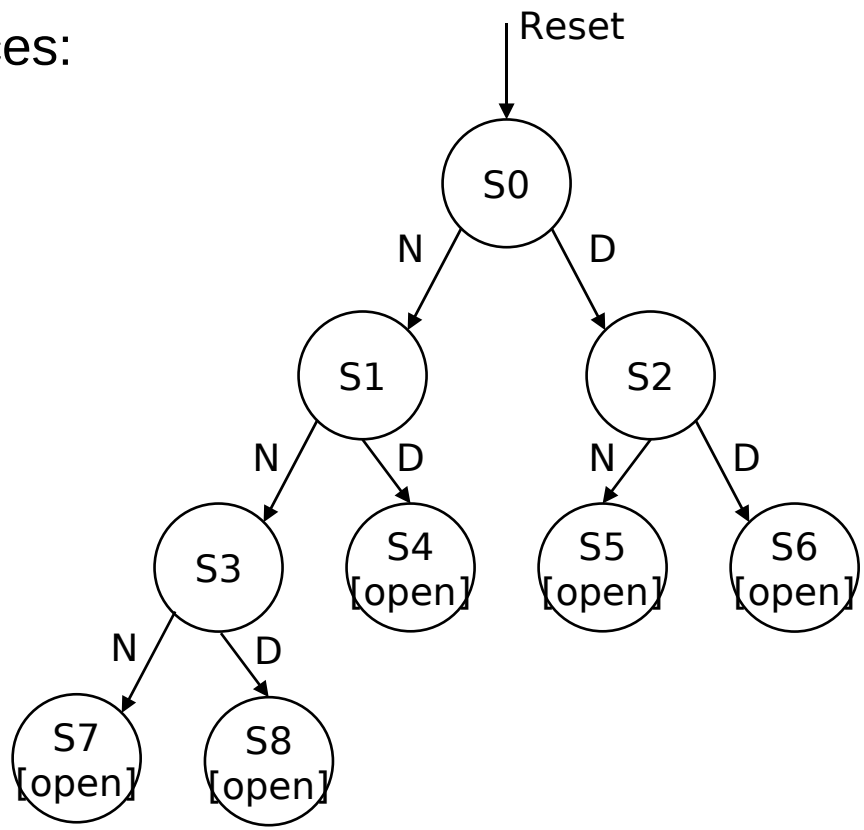

 © Copyright 2004, Gaetano Borriello and Randy

Example: vending machine (cont'd)

- Minimize number of states - reuse states whenever possible

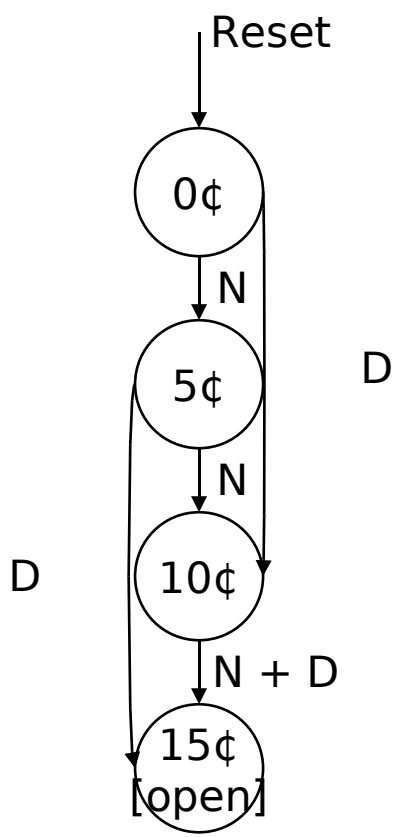

present state	inputs N	inputs D	next state	output open
0¢	0	0	0¢	0
	0	1	5¢	0
	1	0	10¢	0
	1	1	–	–
5¢	0	0	5¢	0
	0	1	10¢	0
	1	0	15¢	0
	1	1	–	–
10¢	0	0	10¢	0
	0	1	15¢	0
	1	0	15¢	0
	1	1	–	–
15¢	–	–	15¢	1

symbolic state table

 © Copyright 2004, Gaetano Borriello and Randy

Example: vending machine (cont'd)

- Uniquely encode states

present state		inputs		next state		output
Q1	Q0	D	N	D1	D0	open
0	0	0	0	0	0	0
		0	1	0	1	0
		1	0	1	0	0
		1	1	–	–	–
0	1	0	0	0	1	0
		0	1	1	0	0
		1	0	1	1	0
		1	1	–	–	–
1	0	0	0	1	0	0
		0	1	1	1	0
		1	0	1	1	0
		1	1	–	–	–
1	1	–	–	1	1	1

 © Copyright 2004, Gaetano Borriello and Randy

Example: Moore implementation

- Mapping to logic

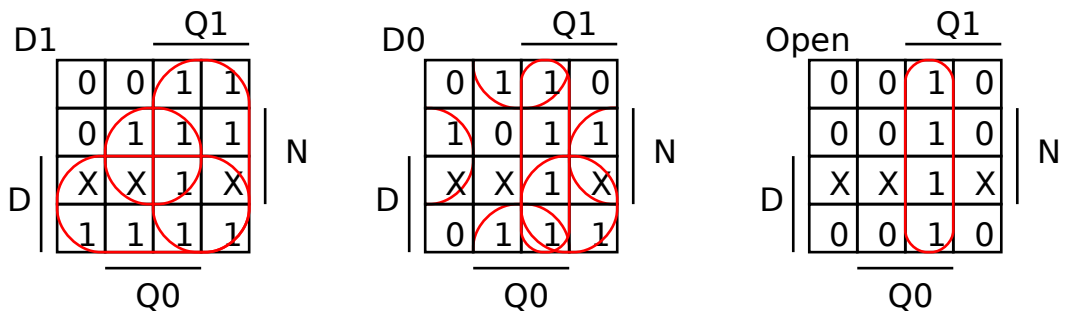

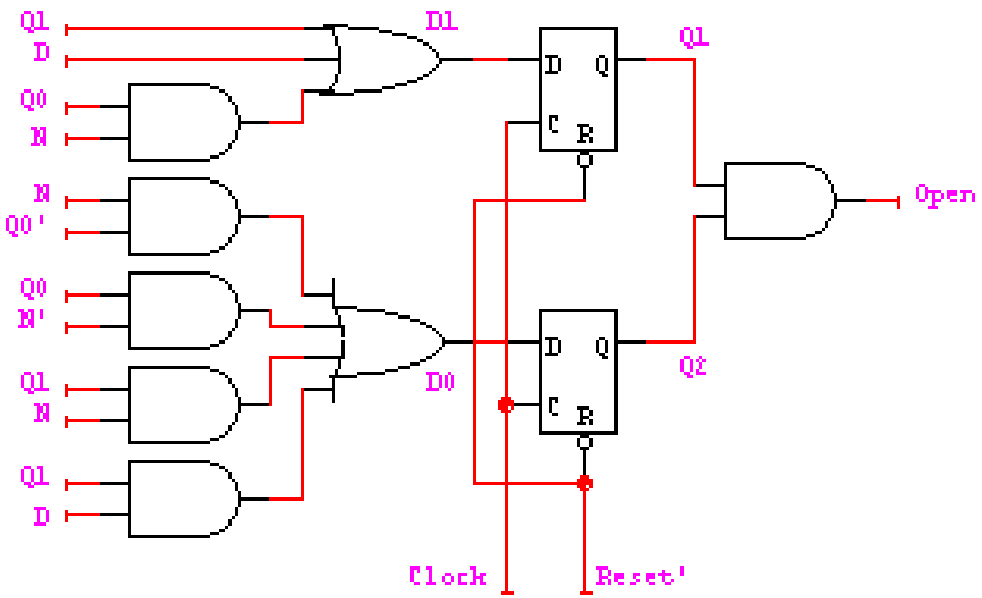

D1 = Q1 + D + Q0 N

D0 = Q0’ N + Q0 N’ + Q1 N + Q1 D

OPEN = Q1 Q0

© Copyright 2004, Gaetano Borriello and Randy

Example: vending machine (cont'd)

- One-hot encoding

present state				inputs		next state				output
Q3	Q2	Q1	Q0	D	N	D3	D2	D1	D0	open
0	0	0	1	0	0	0	0	0	1	0
				0	1	0	0	1	0	0
				1	0	0	1	0	0	0
				1	1	-	-	-	-	-
0	0	1	0	0	0	0	0	1	0	0
				0	1	0	1	0	0	0
				1	0	1	0	0	0	0
				1	1	-	-	-	-	-
0	1	0	0	0	0	0	1	0	0	0
				0	1	1	0	0	0	0
				1	0	1	0	0	0	0
				1	1	-	-	-	-	-
1	0	0	0	-	-	1	0	0	0	1

D0 = Q0 D' N'

D1 = Q0 N + Q1 D' N'

D2 = Q0 D + Q1 N + Q2 D' N'

D3 = Q1 D + Q2 D + Q2 N + Q3

OPEN = Q3

 © Copyright 2004, Gaetano Borriello and Randy

Equivalent Mealy and Moore state diagrams

- Moore machine
  - outputs associated with state
- Mealy machine
  - outputs associated with transitions

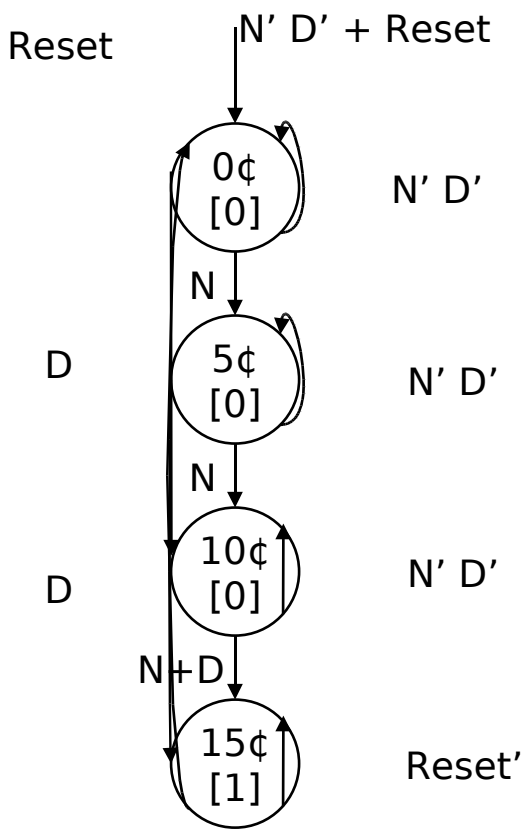

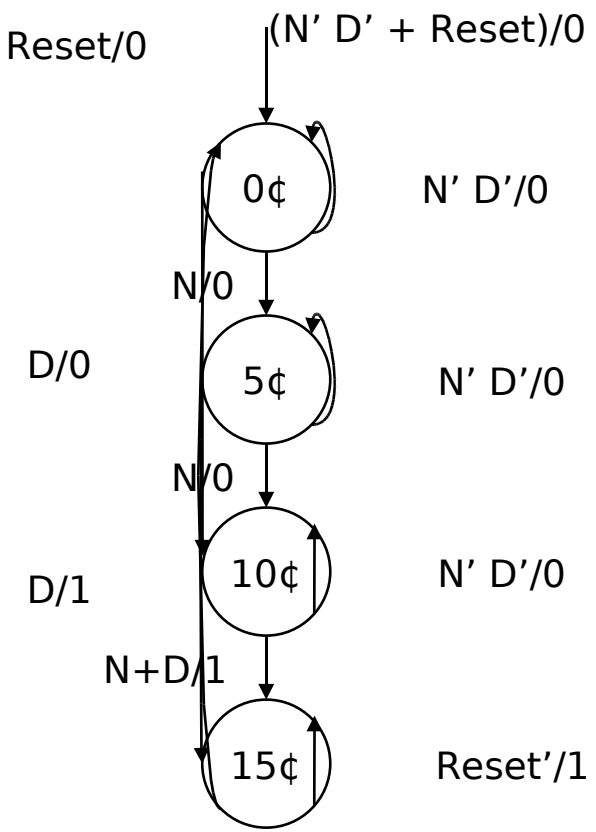

 © Copyright 2004, Gaetano Borriello and Randy

Example: Mealy implementation

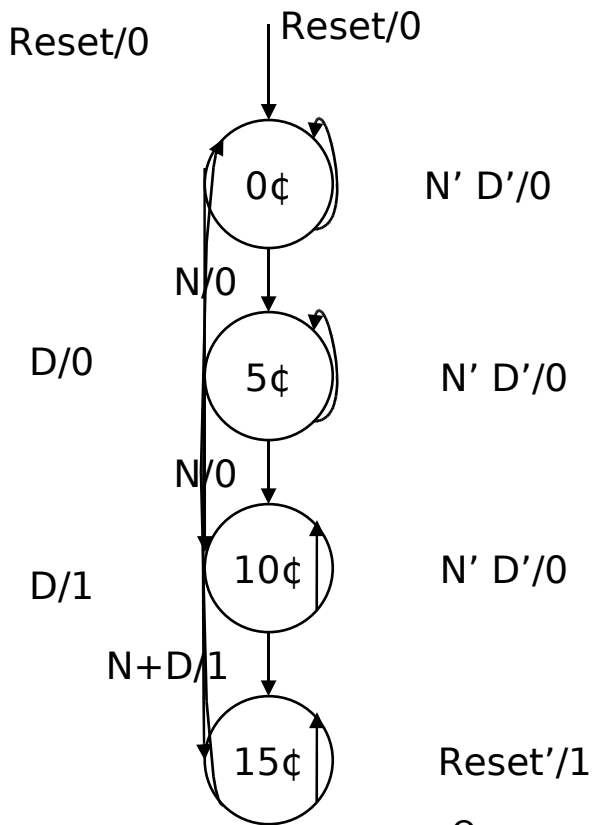

present state Q1	Q0	inputs D	N	next state D1	D0	output open
0	0	0	0	0	0	0
		0	1	0	1	0
		1	0	1	0	0
		1	1	–	–	–
0	1	0	0	0	1	0
		0	1	1	0	0
		1	0	1	1	1
		1	1	–	–	–
1	0	0	0	1	0	0
		0	1	1	1	1
		1	0	1	1	1
		1	1	–	–	–
1	1	–	–	1	1	1

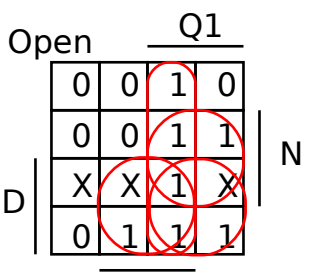

D0 = Q0'N + Q0N' + Q1N + Q1D

D1 = Q1 + D + Q0N

OPEN = Q1Q0 + Q1N + Q1D + Q0D

© Copyright 2004, Gaetano Borriello and Randy

Example: Mealy implementation

D0 = Q0’N + Q0N’ + Q1N + Q1D
D1 = Q1 + D + Q0N
OPEN = Q1Q0 + Q1N + Q1D + Q0D

make sure OPEN is 0 when reset – by adding AND gate

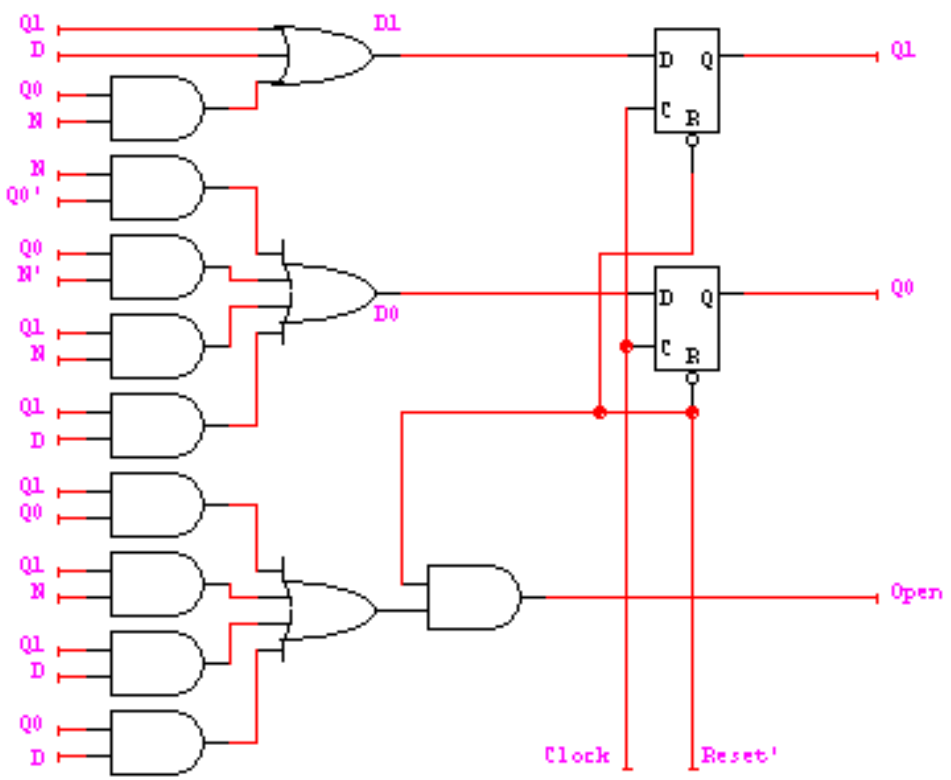

Vending machine: Moore to synch. Mealy

- OPEN = Q1Q0 creates a combinational delay after Q1 and Q0 change in Moore implementation
- This can be corrected by retiming, i.e., move flip-flops and logic through each other to improve delay
- OPEN.d = (Q1 + D + Q0N)(Q0'N + Q0N' + Q1N + Q1D)
  = Q1Q0N' + Q1N + Q1D + Q0'ND + Q0N'D
- Implementation now looks like a synchronous Mealy machine
  - it is common for programmable devices to have FF at end of logic

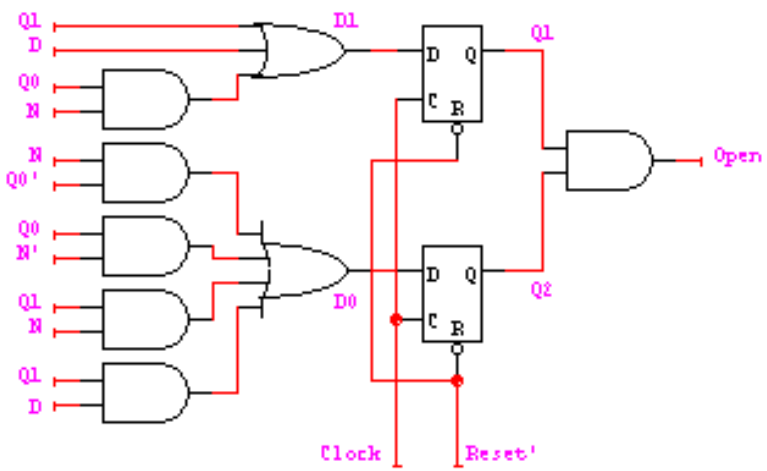

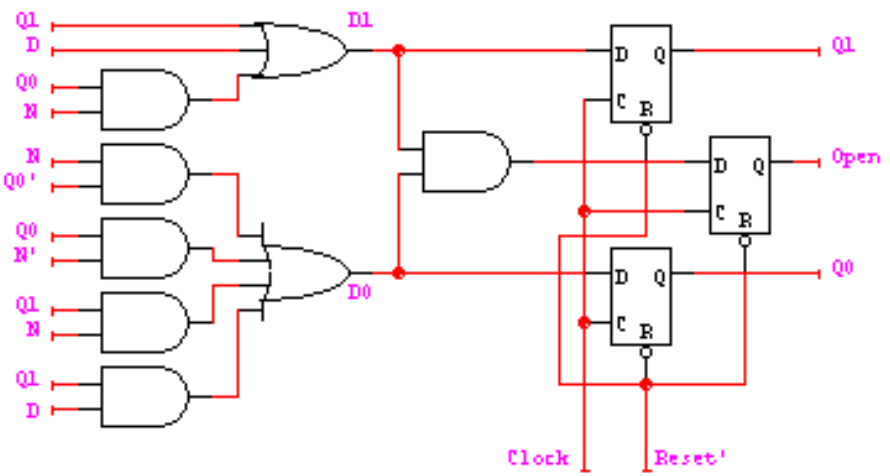

Vending machine: Mealy to synch. Mealy

- OPEN.d = Q1Q0 + Q1N + Q1D + Q0D
- OPEN.d = (Q1 + D + Q0N)(Q0'N + Q0N' + Q1N + Q1D)
  = Q1Q0N' + Q1N + Q1D + Q0'ND + Q0N'D

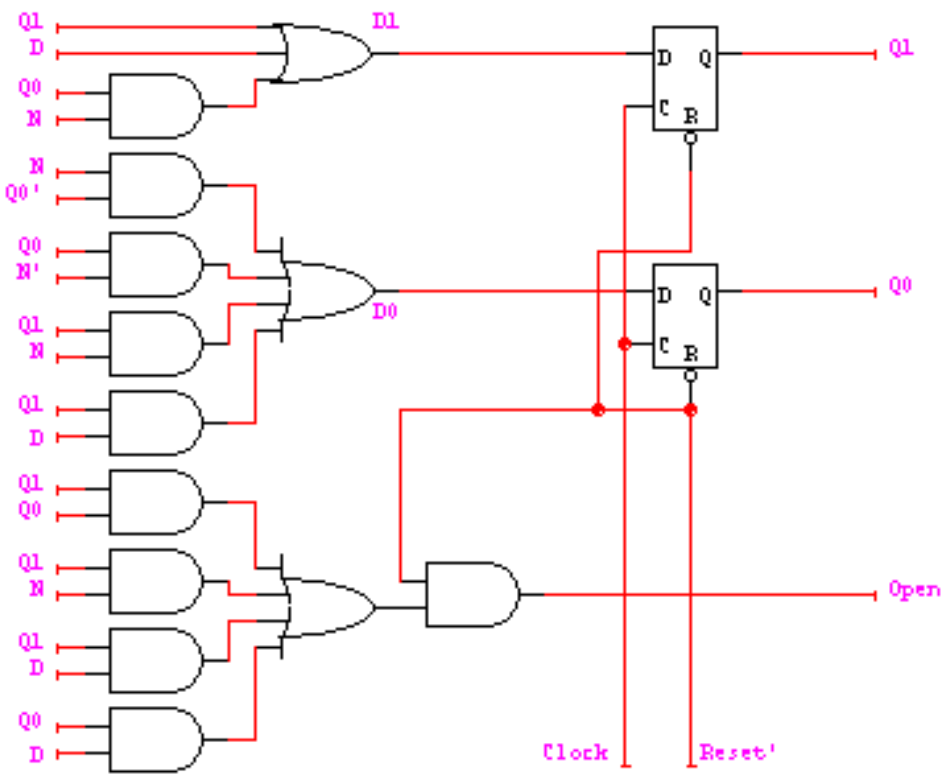

Open.d	Q1			
D \ N				
	0	0	1	0
	0	0	1	1
	1	0	1	1
	0	1	1	1
	Q0			

Open.d	Q1			
D \ N				
	0	0	1	0
	0	0	1	1
	X	X	1	X
	0	1	1	1
	Q0			

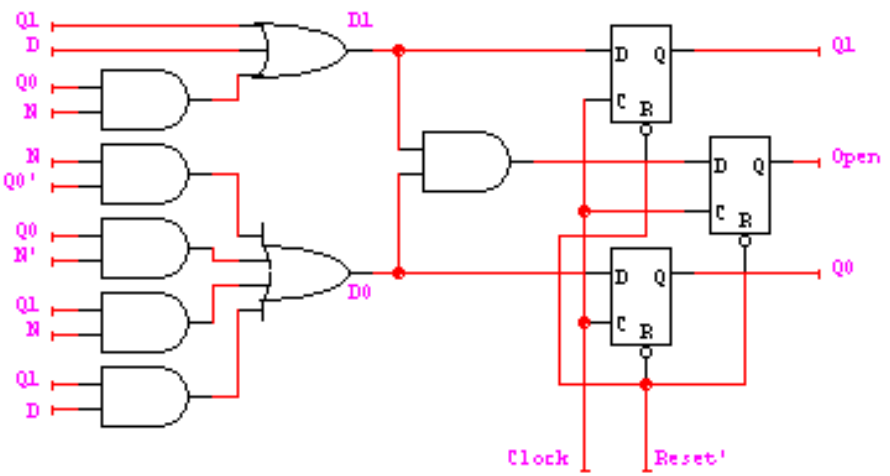

Mealy and Moore examples

- Recognize A,B = 0,1
  - Mealy or Moore?

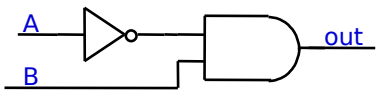

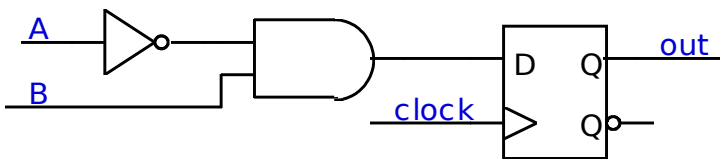

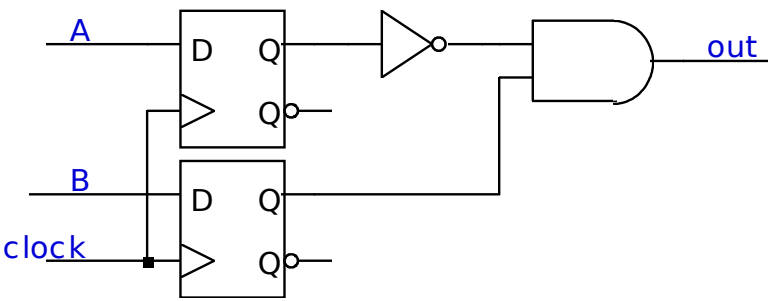

 © Copyright 2004, Gaetano Borriello and Randy

Mealy and Moore examples (cont'd)

- Recognize A,B = 1,0 then 0,1
  - Mealy or Moore?

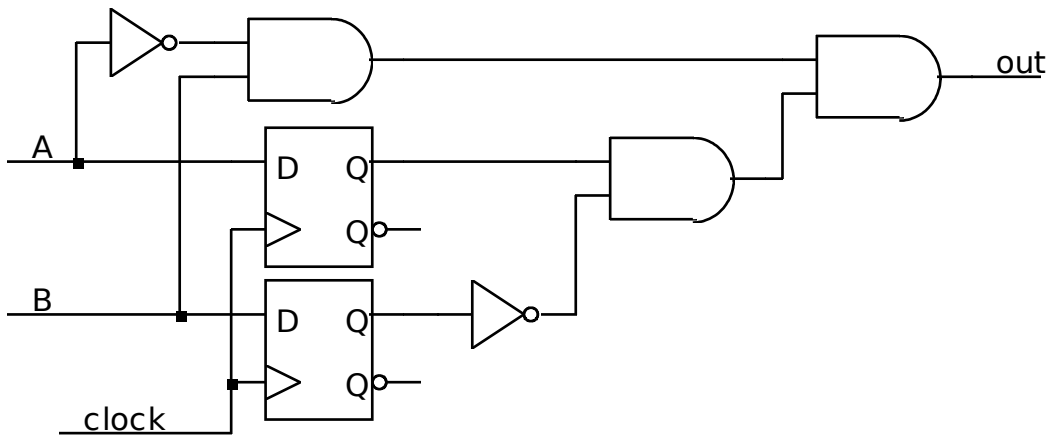

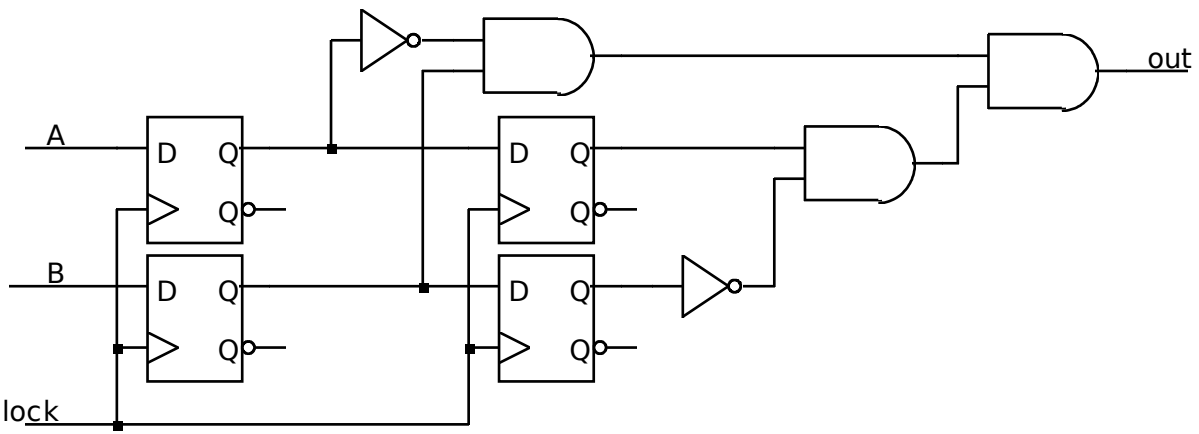

 © Copyright 2004, Gaetano Borriello and Randy

Hardware Description Languages and Sequential Logic

- Flip-flops
  - representation of clocks - timing of state changes
  - asynchronous vs. synchronous
- FSMs
  - structural view (FFs separate from combinational logic)
  - behavioral view (synthesis of sequencers – not in this course)
- Data-paths = data computation (e.g., ALUs, comparators) + registers
  - use of arithmetic/logical operators
  - control of storage elements

 © Copyright 2004, Gaetano Borriello and Randy

Example: reduce-1-string-by-1

- Remove one 1 from every string of 1s on the input

Moore

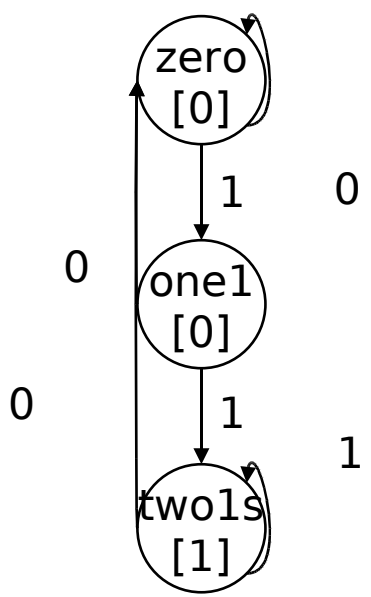

Mealy

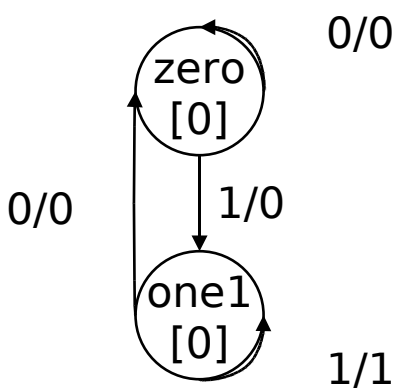

 © Copyright 2004, Gaetano Borriello and Randy

Verilog FSM - Reduce 1s example

- Moore machine

```
module reduce (clk, reset, in, out);
  input clk, reset, in;
  output out;

  parameter zero  = 2  b00;
  parameter one1  = 2  b01;
  parameter two1s = 2  b10;

  reg out;
  reg [2:1] state;       // state variables
  reg [2:1] next_state;

  always @(posedge clk)
    if (reset) state = zero;
    else       state = next_state;
```

state assignment
(easy to change,
if in one place)

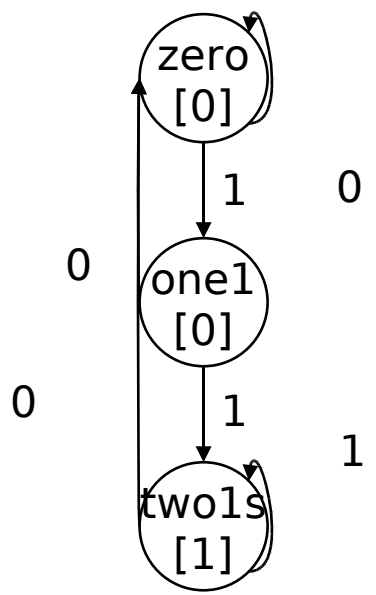

 © Copyright 2004, Gaetano Borriello and Randy

Moore Verilog FSM (cont'd)

```
always @(in or state)

  case (state)
    zero:
   // last input was a zero
    begin
      if (in) next_state = one1;
      else    next_state = zero;
    end
     one1:
   // we've seen one 1
    begin
      if (in) next_state = two1s;
      else    next_state = zero;
    end
     two1s:
   // we've seen at least 2 ones
    begin
      if (in) next_state = two1s;
      else    next_state = zero;
    end
  endcase
```

crucial to include all signals that are input to state determination

note that output depends only on state

```
always @(state)
  case (state)
    zero: out = 0;
    one1: out = 0;
   two1s: out = 1;
  endcase

endmodule
```

 © Copyright 2004, Gaetano Borriello and Randy

Mealy Verilog FSM

```
module reduce (clk, reset, in, out);
  input clk, reset, in;
  output out;
  reg out;
  reg state; // state variables
  reg next_state;

  always @(posedge clk)
    if (reset) state = zero;
    else       state = next_state;

  always @(in or state)
    case (state)
      zero:             // last input was a zero
     begin
       out = 0;
       if (in) next_state = one;
       else    next_state = zero;
     end
      one:              // we've seen one 1
     if (in) begin
        next_state = one; out = 1;
     end else begin
        next_state = zero; out = 0;
     end
    endcase
endmodule
```

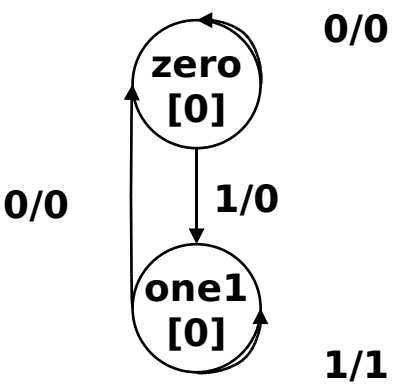

 © Copyright 2004, Gaetano Borriello and Randy

Synchronous Mealy Machine

```
module reduce (clk, reset, in, out);
  input clk, reset, in;
  output out;
  reg out;
  reg state; // state variables

  always @(posedge clk)
    if (reset) state = zero;
    else
     case (state)
      zero:      // last input was a zero
     begin
       out = 0;
       if (in) state = one;
       else    state = zero;
     end
      one:       // we've seen one 1
     if (in) begin
         state = one; out = 1;
     end else begin
         state = zero; out = 0;
     end
    endcase
endmodule
```

 © Copyright 2004, Gaetano Borriello and Randy

Finite state machines summary

- Models for representing sequential circuits
  - abstraction of sequential elements
  - finite state machines and their state diagrams
  - inputs/outputs
  - Mealy, Moore, and synchronous Mealy machines
- Finite state machine design procedure
  - deriving state diagram
  - deriving state transition table
  - determining next state and output functions
  - implementing combinational logic
- Hardware description languages

 © Copyright 2004, Gaetano Borriello and Randy